DS-2CD3063G2-IU
6 MP AcuSense Fixed Bullet Network Camera

AcuSense

Empowered by deep learning algorithms, Hikvision AcuSense technology brings human and vehicle targets classification alarms to front- and back-end devices. The system focuses on human and vehicle targets, vastly improving alarm efficiency and effectiveness.

- High quality imaging with 6 MP resolution
- Efficient H.265+ compression technology
- Clear imaging against strong back light due to 120 dB true WDR technology
- Focus on human and vehicle classification based on deep learning
- Built-in microphone for real-time audio security
- Water and dust resistant (IP67)

▪ Specification

Camera	
Image Sensor	1/2.8" Progressive Scan CMOS
Min. Illumination	Color: 0.005 Lux @ (F1.6, AGC ON), B/W: 0 Lux with IR
Max. Resolution	3200 × 1800
Shutter Speed	1/3 s to 1/100,000 s
Day & Night	IR cut filter
Angle Adjustment	Pan: 0° to 360°, tilt: 0° to 90°, rotate: 0° to 360°
Lens	
Lens Type	Fixed focal lens, 2.8, 4, and 6 mm optional
Focal Length & FOV	2.8 mm, horizontal FOV 107°, vertical FOV 57°, diagonal FOV 128° 4 mm, horizontal FOV 87°, vertical FOV 46°, diagonal FOV 105° 6 mm, horizontal FOV 54°, vertical FOV 29°, diagonal FOV 63°
Lens Mount	M12
Iris Type	Fixed
Aperture	F1.6
DORI	
DORI	2.8 mm: D: 73 m, O: 29 m, R: 15 m, I: 7 m 4 mm: D: 90 m, O: 35 m, R: 18 m, I: 9 m 6 mm: D: 147 m, O: 58 m, R: 29 m, I: 15 m
Illuminator	
Supplement Light Type	IR
Supplement Light Range	Up to 40 m
Smart Supplement Light	Yes
IR Wavelength	850 nm
Video	
Main Stream	50 Hz: 20 fps (3200 × 1800) 25 fps (2688 × 1520, 1920 × 1080, 1280 × 720) 60 Hz: 20 fps (3200 × 1800) 30 fps (2688 × 1520, 1920 × 1080, 1280 × 720)
Sub-Stream	50 Hz: 25 fps (640 × 480, 640 × 360) 60 Hz: 30 fps (640 × 480, 640 × 360)
Third Stream	50 Hz: 10 fps (1920 × 1080, 1280 × 720, 640 × 480, 640 × 360) 60 Hz: 10 fps (1920 × 1080, 1280 × 720, 640 × 480, 640 × 360) *Third stream is supported under certain settings.
Video Compression	Main stream: H.265/H.264/H.264+/H.265+ Sub-stream: H.265/H.264/MJPEG Third stream: H.265/H.264 *Third stream is supported under certain settings.
Video Bit Rate	32 Kbps to 16 Mbps
H.264 Type	Baseline Profile/Main Profile/High Profile
H.265 Type	Main Profile
Bit Rate Control	CBR/VBR
Scalable Video Coding (SVC)	H.264 and H.265 encoding

Region of Interest (ROI)	1 fixed region for main stream and sub-stream
Audio	
Audio Compression	G.711ulaw/G.711alaw/G.722.1/G.726/MP2L2/PCM/MP3/AAC
Audio Bit Rate	64 Kbps (G.711ulaw/G.711alaw)/16 Kbps (G.722.1)/16 Kbps (G.726)/16 Kbps to 64 Kbps (AAC)/32 to 192 Kbps (MP2L2)/8 to 320 Kbps (MP3)
Audio Sampling Rate	8 kHz/16 kHz/32 kHz/44.1 kHz/48 kHz
Environment Noise Filtering	Yes
Network	
Protocols	TCP/IP, ICMP, HTTP, HTTPS, FTP, DHCP, DNS, DDNS, RTP, RTSP, NTP, UPnP, SMTP, IGMP, 802.1X, QoS, IPv4, IPv6, UDP, Bonjour, SSL/TLS, PPPoE, SNMP
Simultaneous Live View	Up to 6 channels
API	Open Network Video Interface (Profile S, Profile G), ISAPI, SDK
User/Host	Up to 32 users. 3 user levels: administrator, operator and user
Security	Password protection, complicated password, HTTPS encryption, IP address filter, Security Audit Log, basic and digest authentication for HTTP/HTTPS, TLS 1.1/1.2, WSSE and digest authentication for Open Network Video Interface
Network Storage	NAS (NFS, SMB/CIFS), auto network replenishment (ANR) Together with high-end Hikvision memory card, memory card encryption and health detection are supported.
Client	iVMS-4200, Hik-Connect, Hik-Central
Web Browser	Plug-in required live view: IE 10, IE 11 Plug-in free live view : Chrome 57.0+, Firefox 52.0+ Local service: Chrome 57.0+, Firefox 52.0+
Image	
Image Parameters Switch	Yes
Image Settings	Rotate, mirror, privacy mask, saturation, brightness, contrast, sharpness, gain, white balance adjustable by client software or web browser
Day/Night Switch	Day, Night, Auto, Schedule
Image Enhancement	BLC, HLC, 3D DNR, target cropping
Wide Dynamic Range (WDR)	120 dB
SNR	≥ 52 dB
Interface	
On-Board Storage	Built-in memory card slot, support microSD card, up to 256 GB
Ethernet Interface	1 RJ45 10 M/100 M self-adaptive Ethernet port
Built-in Microphone	Yes
Hardware Reset	Yes
Event	
Basic Event	Motion detection (human and vehicle targets classification), video tampering alarm, exception
Linkage	Upload to FTP/memory card/NAS, notify surveillance center, trigger recording, trigger capture, send email
Face Detection	Yes

Deep Learning Function	
Perimeter Protection	Line crossing detection, intrusion detection, region entrance detection, region exiting detection, unattended baggage detection, object removal detection Supports human and vehicle targets classification
General	
Power	12 VDC ± 25%, reverse polarity protection, 0.5 A, max. 6 W, Ø5.5 mm coaxial power plug PoE: 802.3af, 36 V to 57 V, Class 3, 0.2 A to 0.13 A, max. 7.2 W
Camera Material	Aluminum alloy body IR cover: plastic
Screw Material	SUS304
Camera Dimension	Ø70 mm × 161.7 mm (Ø2.8" × 6.4”)
Package Dimension	216 mm × 121 mm × 118 mm (8.6" × 4.8" × 4.7")
Camera Weight	Approx. 490 g (1.1 lb.)
With Package Weight	Approx. 724 g (1.6 lb.)
Storage Conditions	-30 °C to 60 °C (-22 °F to 140 °F). Humidity 95% or less (non-condensing)
Startup and Operating Conditions	-30 °C to 60 °C (-22 °F to 140 °F). Humidity 95% or less (non-condensing)
Web Client Language	33 languages English, Russian, Estonian, Bulgarian, Hungarian, Greek, German, Italian, Czech, Slovak, French, Polish, Dutch, Portuguese, Spanish, Romanian, Danish, Swedish, Norwegian, Finnish, Croatian, Slovenian, Serbian, Turkish, Korean, Traditional Chinese, Thai, Vietnamese, Japanese, Latvian, Lithuanian, Portuguese (Brazil), Ukrainian
General Function	Anti-flicker, heartbeat, password reset via email, pixel counter
Approval	
EMC	FCC (47 CFR Part 15, Subpart B); CE-EMC (EN 55032: 2015, EN 61000-3-2: 2014, EN 61000-3-3: 2013, EN 50130-4: 2011 +A1: 2014); RCM (AS/NZS CISPR 32: 2015); IC (ICES-003: Issue 6, 2016); KC (KN 32: 2015, KN 35: 2015)
Safety	UL (UL 60950-1); CB (IEC 60950-1:2005 + Am 1:2009 + Am 2:2013); CE-LVD (EN 60950-1:2005 + Am 1:2009 + Am 2:2013); BIS (IS 13252(Part 1):2010+A1:2013+A2:2015); LOA (IEC/EN 60950-1)
Environment	CE-RoHS (2011/65/EU); WEEE (2012/19/EU); Reach (Regulation (EC) No 1907/2006)
Protection	IP67 (IEC 60529-2013)

▪ Available Model

DS-2CD3063G2-IU (2.8/4/6 mm)

▪ Typical Application

Hikvision products are classified into three levels according to their anti-corrosion performance. Refer to the following description to choose for your using environment.

This model has NO SPECIFIC PROTECTION.

Level	Description
Top-level protection	Hikvision products at this level are equipped for use in areas where professional anti-corrosion protection is a must. Typical application scenarios include coastlines, docks, chemical plants, and more.
Moderate protection	Hikvision products at this level are equipped for use in areas with moderate anti-corrosion demands. Typical application scenarios include coastal areas about 2 kilometers (1.24 miles) away from coastlines, as well as areas affected by acid rain.
No specific protection	Hikvision products at this level are equipped for use in areas where no specific anti-corrosion protection is needed.

▪ Dimension

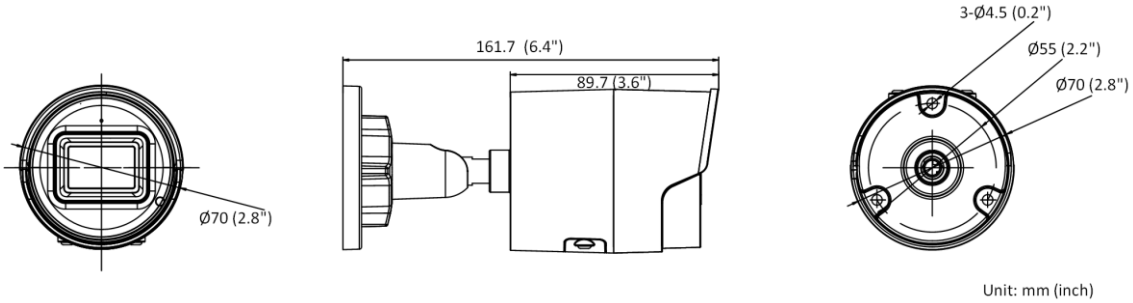

▪ Accessory

▪ Optional

DS-1280ZJ-XS Junction box

Distributed by

Headquarters
No.555 Qianmo Road, Binjiang District,
Hangzhou 310051, China
T +86-571-8807-5998
overseasbusiness@hikvision.com

Hikvision USA
T +1-909-895-0400
sales.usa@hikvision.com

Hikvision Europe
T +31-23-5542770
sales.eu@hikvision.com

Hikvision UK & Ireland
T +01628-902140
sales.uk@hikvision.com

Hikvision UAE
T +971-4-4432090
salesme@hikvision.com

Hikvision Russia
T +7-495-669-67-99
saleru@hikvision.com

Hikvision Australia
T +61-2-8599-4233
salesau@hikvision.com

Hikvision Italy
T +39-0438-6902
info.it@hikvision.com

Hikvision South Africa
Tel: +27 (10) 0351172
sale.africa@hikvision.com

Hikvision Singapore
T +65-6684-4718
sg@hikvision.com

Hikvision Korea
T +82-(0)31-731-8817
sales.korea@hikvision.com

Hikvision India
T +91-22-28469900
sales@pramahikvision.com

Hikvision Brazil
T +55 11 3318-0050
Latam.support@hikvision.com

Hikvision France
T +33(0)1-85-330-450
info.fr@hikvision.com

Hikvision Spain
T +34-91-737-16-55
info.es@hikvision.com

Hikvision Poland
T +48-22-460-01-50
info.pl@hikvision.com

Hikvision Canada
T +1-866-200-6690
sales.canada@hikvision.com

Hikvision Turkey
T +90 (216)521 7070- 7074
sales.tr@hikvision.com

Hikvision Kazakhstan
T +7-727-9730667
nikia.panfilov@hikvision.ru

Hikvision Tashkent
T +99-87-1238-9438
uzb@hikvision.ru

Hikvision Indonesia
T +62-21-2933759
Sales.Indonesia@hikvision.com

Hikvision Thailand
T +662-275-9949
sales.thailand@hikvision.com

Hikvision Malaysia
T +601-7652-2413
sales.my@hikvision.com

Hikvision Vietnam
T +84-974270888
sales.vt@hikvision.com

Hikvision Hong Kong
T +852-2151-1761
info.hk@hikvision.com

Hikvision Colombia
sales.colombia@hikvision.com

© Hikvision Digital Technology Co., Ltd. 2020 | Data subject to change without notice |

050511520211130